European Online Journal of Natural and Social Sciences 2015; www.european-science.com
Vol.3, No.3 Special Issue on New Trends in Architecture, Civil Engineering, and Urban Studies
ISSN 1805-3602

Control system design for quasi Z-source inverter as an interface converter for manageable distributed generation sources

Manaf Hassannezhad[1*], Babak Valizadeh[2]
[1]Young Researchers and Elite Club, Sardasht Branch, Islamic Azad University, Sardasht, Iran
[2]Young Researchers and Elite Club, Urmia Branch, Islamic Azad University, Urmia, Iran
*E-mail: m.h.nezhad9820@gmail.com

Abstract

In this paper, the quasi Z-source inverter is used as an interface converter for distributed generation sources (DG). To obtain a dynamic model of the system, a small-signal linear model of a system around a specific operating point will be used. To obtain the describing equations of the system, the medium matrix is used in the inverter. After dynamic modeling of inverter system, the obtained model is used for the design of the DC controller and impedance grid. In this paper, controller suitable for distributed generation sources with controllable production is designed. For the proper functioning of the Z-source quasi inverter as an interface converter for distributed generation sources, it is necessary that in addition to the impedance grid controller, the AC inverter controller will be also designed. To this end, the appropriate current and voltage controllers on the AC current are introduced. To evaluate the performance of quasi Z-source inverter controller, the simulation in MATLAB / Simulink is used.

Keywords: Quasi Z-source inverter, distributed generation resources, controllable production, dynamic modeling, interface converters, controller design

Introduction

Inverter-based pulse width modulated are used in many applications such as connecting renewable energy sources such as photovoltaic systems and wind turbines to the grid, fuel cell control, AC machine control, DG, etc. to convert DC to AC voltage. Nowadays, voltage source inverter (VSI) is the most commonly used inverters to convert DC to AC voltage and vice versa. However, these inverters are just a lowering inverter of the DC to AC and are not applicable in applications that require a higher voltage level in the AC. Moreover, this type of inverter is sensitive to noise and electromagnetic interference (EMI) and in that unwanted turning on and both top and bottom switches of inverter phases, resulting in the loss of the switch.

The Z-source inverter that is introduced in reference (Jonghe, Hobbs, & Belmans, 2012) is a boost / reducer converter of a class that requires no DC / DC additional converter and by using capacitive inductance impedance grid between the source and the inverter, has the increasing ability of the voltage. Increasing operating of the voltage in this type of inverter occurs via the allocation of short circuits intervals in inverter that was not allowed in voltage source inverter. With regard to the legality of the short-circuit inverter stems as part of the conversion process, this type of converter is not sensitive towards switching noise. According to the above converter characteristics, this type of converter has been used in a variety of applications. Z-source inverter is used as a converter to control the fuel cell (Peng, 2003; Jung & Keyhani, 2007). A Z-source inverter is used as an interface converter for a PV system (Peng, 2003; Jung & Keyhani, 2007). A resistant power electronics interface system PEI with high confident ability is introduced for wind turbine based on the Z-source inverter (Huang et al, 2008). The Z-source inverter is used to control the uninterrupted power supply (Cao et al, 2011).

In addition to the introduction of this type of converter applications, in many articles, different types of structures have been introduced for this type of converter. In these structures, the main purpose is to increase the voltage gain of Z-source inverter. According to Zhou et al (2008), switched inductor Z-source inverter is introduced to increase the voltage gain. In this structure, by using six additional diodes in impedance grid, voltage gain can be increased significantly. Structures for a Z-source inverter is introduced, in which a high frequency transformer in impedance grid is used. With this transformer and adjusting, the ratio of the Trans round, a high gain can be achieved (Zhu, Yu, & Luo, 2010; Zhou et al, 2008) . Strongly increasing structures has been introduced in which by using further number of elements in the impedance grid higher voltage gain can be achieved (Qian, Peng, & Cha, 2011). The Γ-Source structure has been introduced in which a far lower proportion of Trans round, compared with Trans Z-source inverter, as a result of using reduced winding transformer, a higher voltage gain can be achieved (Nguyen et al, 2013).

Among the different types of Z-source inverter, the quasi Z-source inverter is the most appropriate type of inverter as the interface inverter for DG [1]. Unlike conventional Z-source converter, in this type of converter, the absorbed current from the source is continuous and there is no need to use additional filters in it to remove the switching ripple on the input current. Also with this structure, voltage stress will dramatically reduce in one-capacitor on the impedance grid. Moreover, this type of inverter has a simple structure, leading to savings in cost and size of the PEI system.

Impedance grid modeling of quasi Z-source inverter

The structure of this type of inverter in Figure 1 is shown for a PV system. Unlike conventional ZSI, in qZSI structure due to the predecessor series at the source, a continuous flow of supply will be drawn (Anderson & Peng, 2008).

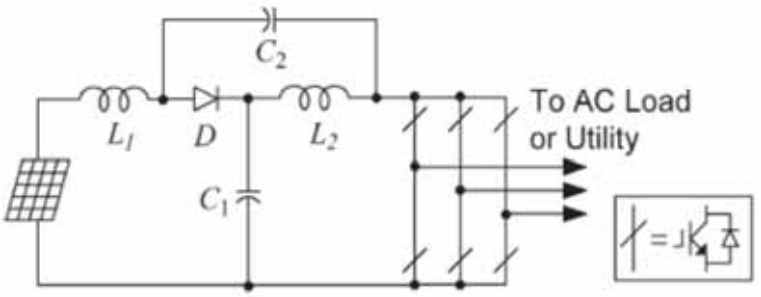

Figure 1: converter structure of qZSI. [1]

For system modeling, the inverter switching modes are divided into two parts of short circuit and non short circuit. In fact, the inverter short-circuits mode is from the power conversion process to increase the input voltage level to the inverter. Non short circuit mode is related to active vectors and zero vectors in the inverter modulation algorithm. In the st mode, with regard to the zero medium voltage on inductors in steady state, we have:

DVC1-(1-D) VC2=0 (1)

D (Vin + VC2) + (1-D) (Vin-VC1) = 0 (2)

By arranging the equation (1) and equation (2), we have:

$$V_{C1} = \frac{1-D}{1-2D} V_{in} \quad (3)$$

$$V_{C2} = \frac{D}{1-2D} V_{in} \quad (4)$$

Where D = T0 / T is the ratio of the inverter short-circuit task. The input voltage on the inverter stems in st mode is zero and in non st mode can be obtained from the equation (5) that is a growing equation for qZSI.

$$V_{pn} = V_{C1} + V_{C2} = \frac{1}{1-2D} V_{in} \tag{5}$$

The Quasi Z-source inverter of impedance grid model is shown in figure (2) in both modes of short circuit and non short circuit. In this figure, the dawning current is modeled from the AC impedance grid with a current source of iload. Moreover, the performance of the inverter stems short-circuit is modeled with the S key. This key is on at moments of short circuit and is off at non short circuit moments. Also in active vectors, the iload current is non-zero value and in null vectors is zero.

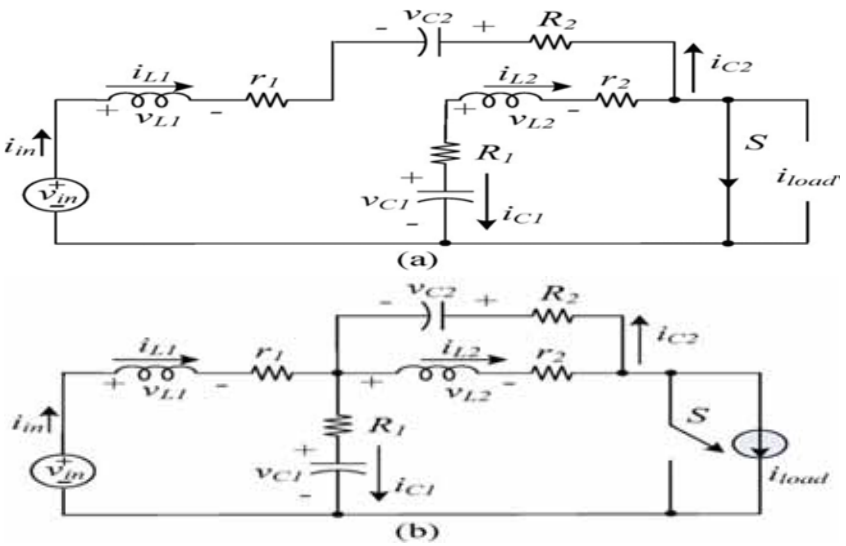

Figure 2: Impedance grid circuit model (a) short circuit (b) non short circuit (Li et al, 2013)

In the obtained model in the figure (2) resistance are equivalent and inductance and resistance equivalent to capacitors are considered. In the short circuit and non-short circuit modes, the capacitors voltage and inductor current are the system state variables. With regard the current and capacitor voltage inductors as describing the system state variables, state equations of impedance grid in short-circuit mode will be as follows,

$$dx/dt = A_{st}\, x + B_{st}\, u, \qquad x=[iL1\ iL2\ vC1\ vC2\ ]T \tag{6}$$

$$A_{st} = \begin{bmatrix} -(r+R)/L & 0 & 0 & 1/L \\ 0 & -(r+R)/L & 1/L & 0 \\ 0 & -1/C & 0 & 0 \\ -1/C & 0 & 0 & 0 \end{bmatrix}, \quad u = \begin{bmatrix} i_{load} \\ v_{in} \end{bmatrix}, \quad B_{st} = \begin{bmatrix} 0 & 1/L \\ 0 & 0 \\ 0 & 0 \\ 0 & 0 \end{bmatrix}$$

In addition, in non-st mode, the equivalent circuit for the impedance grid is in the figure of (2b). The state equations describing the figure (2b) are as follows.

$$dx/dt = A_{nst}\, x + B_{nst}\, u \tag{7}$$

$$A_{nst} \begin{bmatrix} -(r+R)/L & 0 & -1/L & 0 \\ 0 & -(r+R)/L & 0 & -1/L \\ 1/C & 0 & 0 & 0 \\ 0 & 1/C & 0 & 0 \end{bmatrix}, \quad B_{nst} = \begin{bmatrix} 0 & 1/L \\ 0 & 0 \\ 0 & 0 \\ 0 & 0 \end{bmatrix}$$

It should be noted that in the above equations, the inductors and the resistor value are assumed equal without losing the generality issue and for simplicity of calculations ahead.

(L1=L2=L,C1=C2=C, r1=r2=r)

By using the average state spatial method, the final state equations of the system are as follows.

$$\frac{dx}{dt} = A\,x + B\,u, \qquad y = Cx(8)\,, \qquad y=\begin{bmatrix} v_{c1} \\ i_{L1} \end{bmatrix}$$

$$, A = D.A_{\mathrm{st}} + (1-D).A_{\mathrm{nst}} = \begin{bmatrix} -(r+R)/L & 0 & -(1-D)/L & D/L \\ 0 & -(r+R)/L & D/L & -(1-D)/L \\ (1-D)/C & -D/C & 0 & 0 \\ -D/C & (1-D)/C & 0 & 0 \end{bmatrix}$$

$$B = D.B_{st} + (1-D).B_{nst} \begin{bmatrix} 0 & 1/L \\ 0 & 0 \\ -(1-D)/C & 0 \\ -(1-D)/C & 0 \end{bmatrix} \text{ And } \qquad C=\begin{bmatrix} 0 & 0 & 1 & 0 \\ 1 & 0 & 0 & 0 \end{bmatrix}$$

In this equation, the amount of drawing current from the impedance grid and DC voltage are considered as the system inputs. In addition, the capacitor voltage 1 and inductor current 1 are output variables. Moreover, D represents the ratio of the source short-circuit task. By using matrix linearization the system state on a specific operating point, the $G_{\hat{D}}^{\hat{v}_c}$ system grid function will be obtained as follows [1].

$$G_{\hat{D}}^{\hat{v}_c} = \frac{\hat{v}_c}{\hat{D}} \frac{(Vc01+Vc02)(1-2D_0)+(I_{load}-I_{L01}-I_{L02})(Ls+r)}{LCs^2+rCs+(1-2D_0)^2} \tag{9}$$

In which, all variables have been expressed as small signal disturbances around a specific operating point. In addition, the amounts of Vc01, Vc02, IL01, IL02, and D0 are respectively the capacitor voltage values of 1 and 2, the current values inductors of 1 and 2 and the ratio of the inverter short-circuit task at the system operating point. In this equation, both capacitor voltages equal to each other and are shown as$\hat{v}_c$.

Manageable distributed generation controller of the sources

In the DG function mode connected to the grid, it only needs a certain amount of power transmit to the grid. In this case, when DG is connected to the main grid, its voltage and frequency will be dictated by the main grid. In this mode, the quasi Z-source inverter model in the presence of the grid is as shown in Figure 3.

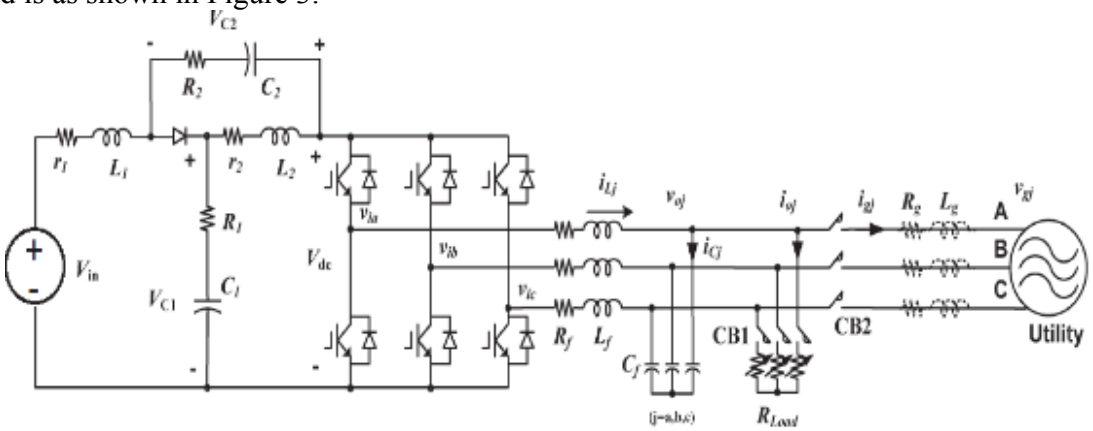

Figure 3: Quasi Z-source converter connected to the grid

For the performance of the grid connection, CB2 key is required to be closed. In this case it is necessary that voltage capacitor C1 will be controlled by short-circuit coefficient D on a certain amount. According to the source structure that is a source with controlled production, in order to transfer the power from DG to the grid by controlling, two control loops will be used as shown in Figure 4.

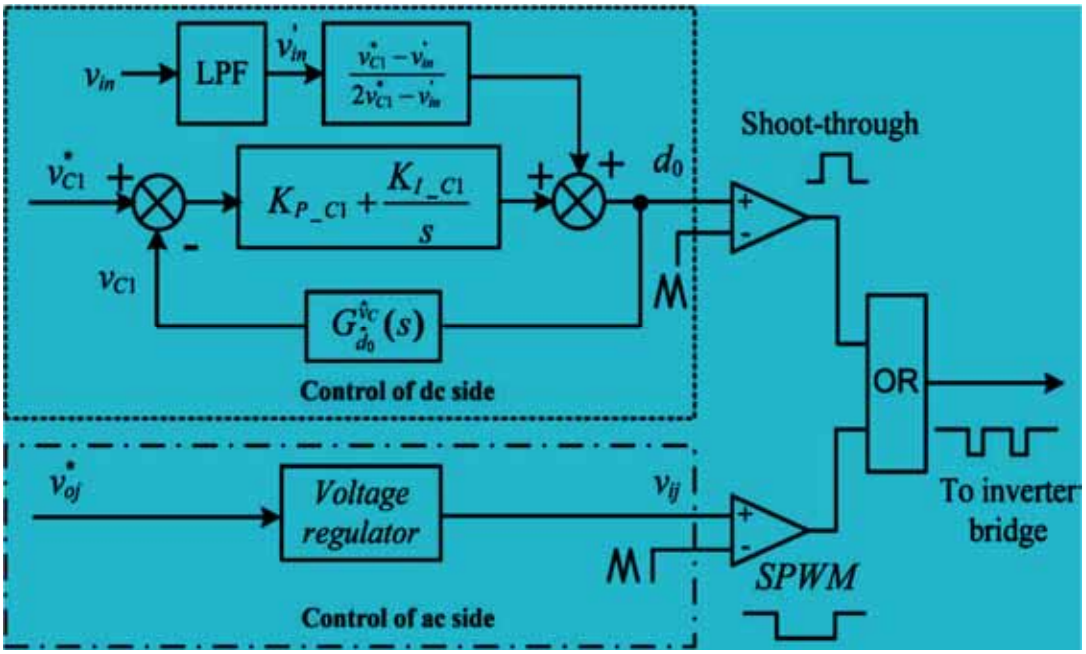

Figure 4: Controller model for qZSI inverter with the resource and controlled production

The first control loop relates to the impedance grid of capacitor voltage control. By controlling the impedance grid capacitor voltage, the input voltage will be controlled to the inverter stems in a specified amount and provides a constant voltage and without oscillation. Despite this controlled voltage at both ends of the inverter in DC side, the possibility to send the power with the least THD to the grid exists. There was also a control system for central capacitor impedance results in reducing the effect of disturbances on the supply grid are placed on the side. In controlled mode, the resource disturbances have not an effect on both heads of inverter and always provides a constant voltage for the inverter.

As in Figure 4 can be seen, for control of the intermediate capacitor voltage, the short circuit coefficient of the inverter(D) is used. Therefore, when the intermediate capacitor voltage is dropped, the (D) coefficient value increases by the controller and this voltage offset will be compensated. The important thing in this controller is observing the specified limits for the modulation coefficient and the duty ratiod0. This limitation is for the simple boost control method in the form of $M < 1 - D$. In the figure of (4), $G_{\hat{d}}^{\hat{v}_c}$ is obtained in equation (9). According to the grid function $G_{\hat{d}}^{\hat{v}_c}$ where, zero is in the right half plane RHP, the system stability limit was low and high-bandwidth controller design is not possible. Therefore, a direct feed system, as shown in Figure (4), is used to produce d_o value of a steady state, and to improve the controller speed in the face of the load and source disturbances. In this direct feeding ring, vi' is the input voltage to the converter that is passed from a low-pass filter. For a converter with the parameters in Table 1 with the values$K_{P-C_1} = 1 \times 10^{-4}$ and $K_{I-C_1} = 0.8$ the bandwidth control system is 25Hz.

Table 1: Quasi Z-source inverter specifications

C=400µF	r=0.47 Ω	R=0.03Ω
Iload=9.9A Vin=130v	D0=0.25	L=500µH

In Figure 4, In addition to the capacity voltage controller, another control loop for controlling the output voltage of the inverter is used to adjust the transmitted power to the grid. The purpose of this part of the controller is the transfer of power to the grid. Capacitor voltage drop in impedance grid side is compensated by the DC side controller and by increasing the D coefficient, therefore, in accordance with the need to transfer specific power to the grid is possible without any problem.

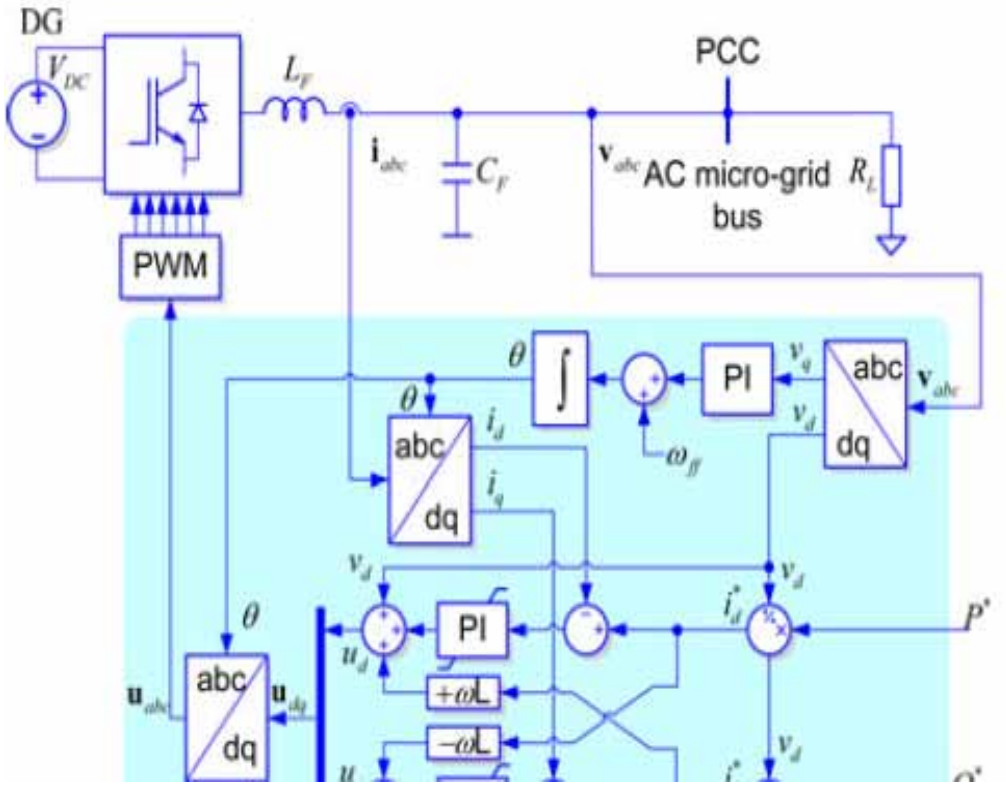

Figure 5: The quasi Z-source inverter AC side controller [15]

The AC side controller in Figure 5 for a grid-connected system is shown. In Figure 5, the sending current value of the grid is calculated from reference values of active and reactive power and by using the grid voltage with equations 10 and 11.

$$\tilde{p} = v_{od} i_{od} + v_{oq} i_{oq} \tag{10}$$

$$\tilde{p} = v_{od} i_{oq} - v_{oq} i_{od} \tag{11}$$

Where, all voltage and current values have been expressed in an inertial reference frame. To convert the voltage and three-phase sinusoidal current variables to DC variables, the converting abc / dq of equation 12 is used.

$$\begin{bmatrix} f_d \\ f_q \\ f_0 \end{bmatrix} = \begin{bmatrix} \sin(wt) & \sin\left(wt - \frac{2\pi}{3}\right) & \sin\left(wt + \frac{2\pi}{3}\right) \\ \cos(wt) & \cos\left(wt - \frac{2\pi}{3}\right) & \cos\left(wt + \frac{2\pi}{3}\right) \\ 1 & 1 & 1 \end{bmatrix} \cdot \begin{bmatrix} f_a \\ f_b \\ f_c \end{bmatrix} \tag{12}$$

Where, wt is the amount of output voltage phase of the inverter.

The AC side current controller is designed with the amount of $K_{PC} = 10.5$ and $K_{IC} = 16 \times 10^3$in 1KHz bandwidth and 89° phase limit and gain.

Simulating the converter performance connected to the source with controllable production

In this field, to evaluate the performance of quasi Z-source inverter, as an interface converter for distributing generation sources such as fuel cell is simulated in the MATLAB / Simulink environment.

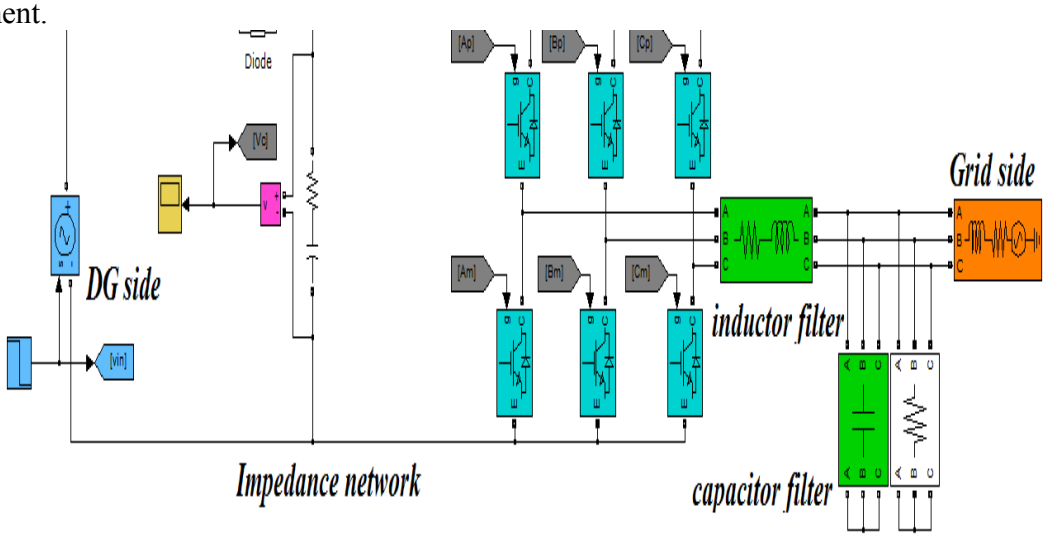

Figure 6: Quasi Z-source inverter-based electronic systems for simulation

In the system shown in Figure (6), a capacitive-inductive filter on the AC side is used to minimize the injected current ripple to the grid. The considering source is a source with controlling production and is able to generate the necessary power. The capacitor voltage is considered 650v in the controller and is set by the capacitor voltage controller. The controller output of the capacitor voltage is the D coefficient that enters into quasi Z-source inversion is switching algorithm. In this part, the simple boost-switching algorithm is used.

Table 2: The system parameters list

The system parameters	Amount
C(Impedance grid)	400µF
L(Impedance grid)	500µH
rL	0.3Ω
Lf(AC side inductors)	2mH
Cf(AC side capacitors)	40µF
rf	0.1Ω
Switching frequency	10kHz
Grid voltage(p-n)	220V(RMS)
DG voltage	420V

Table 3: The controller parameters list

KP(AC controller) =10.5	KP(capacitor controller) = 0.0001
KI(AC controller) =16000	KP(capacitor controller) = 0.1

To evaluate the control system performance, the simulation results are used as follows in two cases: 1) a change in the injection reference current into the grid and 2) turbulences in the source.

Changes in transmitting power to the grid

In figure (7), in the moment of t = 0.2s, the injection reference the current value to the grid increases suddenly from 10A to 20A. As shown in Figure (7) the amount of injection flow grid of 10A to 20A be seen has increased. Sinusoidal waveform and achieving to the expected value of current reflects the proper functioning of the AC side current controller.

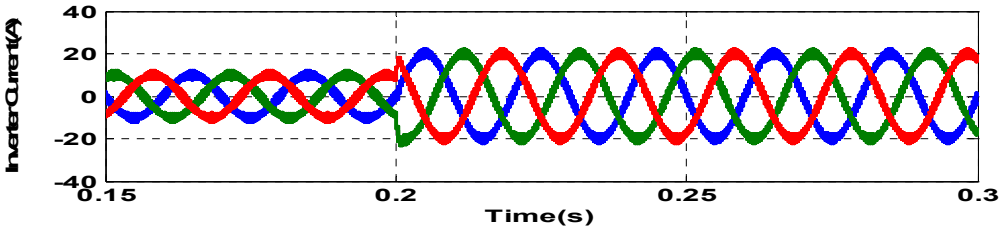

Figure 7: The injection inverter current to the grid

To evaluate the controller performance of the DC side, capacitor voltage of impedance grid is shown in Figure 8. As can be seen, despite changes in power and sending current to the grid, the capacitor voltage amount is remaining constant at 650V. This issue has been achieved due to the capacitor control voltage.

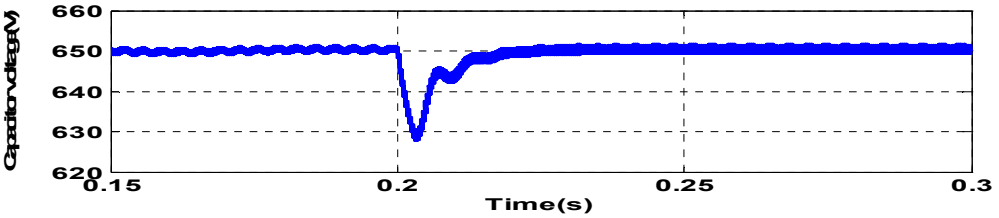

Figure 8: Capacitor voltage of impedance grid

By increasing the injection flow from the system to the grid, the transmit power to the grid has increased. According to the law of power conservation, increasing the transmit power to the grid will be followed by increasing the produced power of the resource and ultimately, the source current. In Figure 9, the inductor current of the impedance grid on the DC source side is shown. By increasing the injection flow to the grid, the amount of source flow will be increased in accordance with Figure 9.

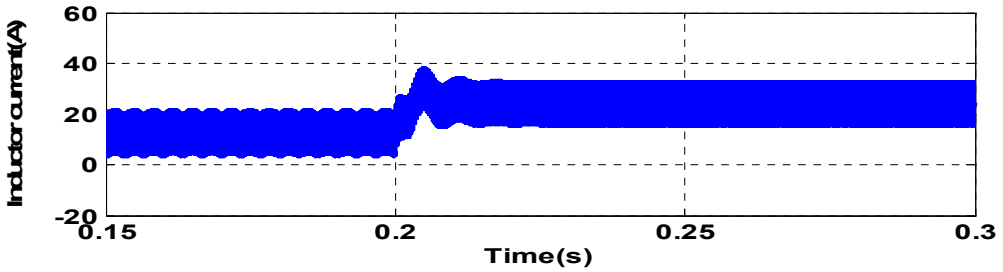

Figure 9: The inductor current on DG side

As mentioned above, to increase the efficiency, the active power will be exchanged with the grid only and reactive power will not be exchanged with the grid. In figure (10), the amount of the active power delivered to the grid is displayed. With the doubling of the injection active flow into the grid, the amount of active power is also doubled as shown in Figure (10).

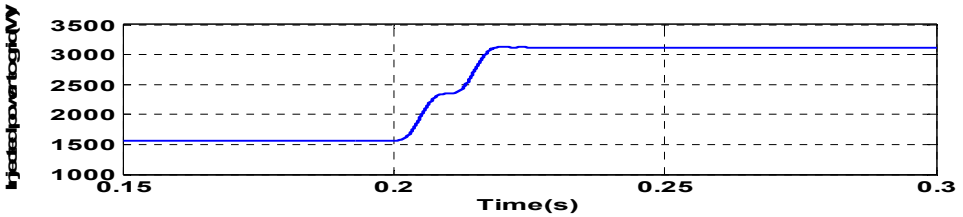

Figure 10: Injected active power into the grid

In figure (11), the amount of reactive power exchange with the source is indicated. Because of the zero injected reactive current into the source, the reactive power is not injected into the grid. However, in a transient state, an amount of reactive power is transmitted to the network, but after disturbances in the control system, it reduces the amount of this power to zero.

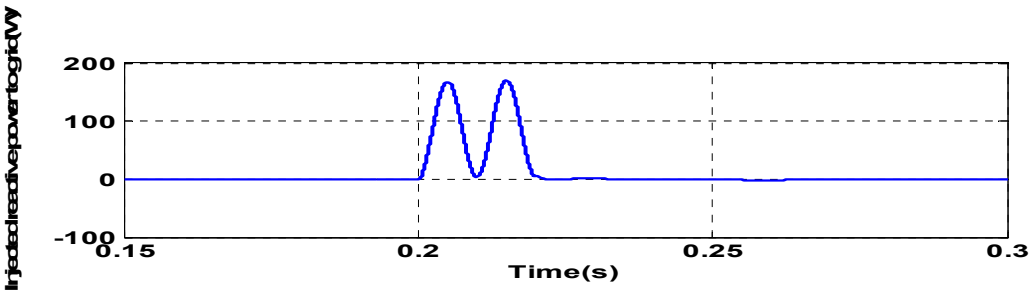

Figure 11: Injecting reactive power into the grid

In Figure (12), the reference values in the modulation of the inverter are shown. As it can be seen, the sine reference values do not exceed of straight lines that are the shortening connection reference so the modulation will be done properly.

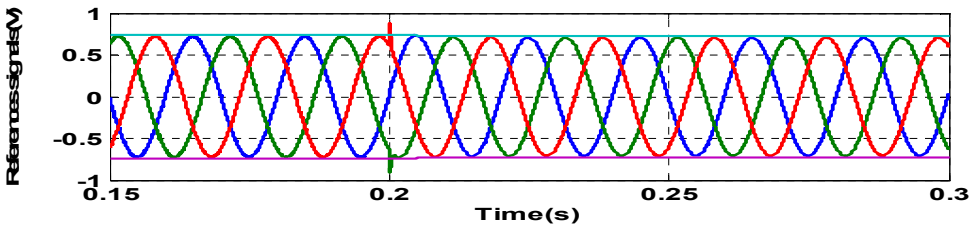

Figure 12: Reference signals in the modulation

Turbulence caused by the drop in supply voltage

In this part, the performance of the control system has been investigated in the face of source severe voltage drops. For this purpose, it is assumed that the DC source voltage will be dropped suddenly to 100V and will be reached from the 420V to 320V.

In figure (13), the impact of this drop in voltage on the capacitor voltage of impedance network is shown. As it can be seen, the voltage drop in the source causes the capacitor voltage drop at first, but the control system of the capacitor voltage will be taken into action immediately and will be compensated this voltage drop as soon as possible.

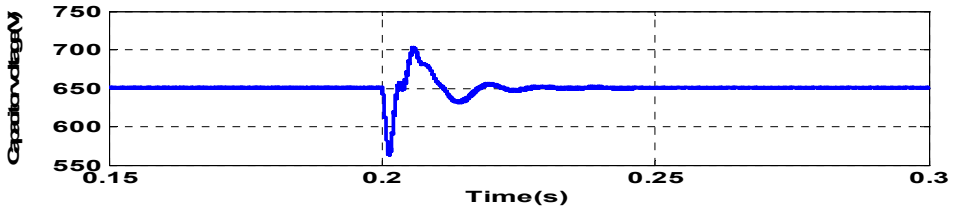

Figure 13: Capacitor voltage during the source severe voltage drop

In conditions of severe voltage drops at the source, the amount of shortening connection coefficient of the inverter (D) changes to control the capacitor voltage. Changes in the shortening connection coefficient of the inverter lead to the displacement of the operating point, so, to continue sending power to the grid, it should also change the modulation coefficient. Changes in the modulation coefficient domain and shortening connection reference signals of the inverter are shown in Figure (14).

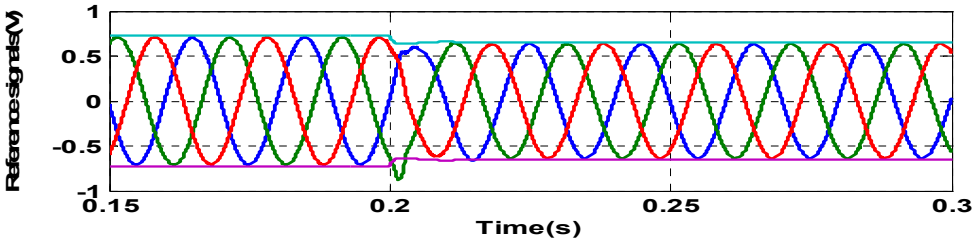

Figure 14: Reference signals during the severe voltage drop at the source

As it can be seen, the source voltage drops leads to a change in each five-reference signals, which represents the turbulence intensity on the system.

Conclusion

Among the different types of Z-source inverter, quasi Z-source structure was selected for applications as a DG converter because of absorbing the continuous flow of source and reducing the voltage stress on one of the capacitors and a simple structure. In addition, suitable controllers are designed for this type of inverter for sources with specific production such as a battery based on the dynamic model of quasi Z-source inverter. The introduced controller increases the source voltage with specific production as much as much it needed well, and leads to the delivery of high-quality power to the grid. In addition, as it is shown, the control system reacts well to sudden changes in the injection current to the network and eliminates the effects of turbulence. As well as the above control, the system indicates resistance to sharp changes in the source voltage.

References

Anderson, J., & F. Z. Peng (2008). Four quasi-Z-source inverters. In Proc. IEEE PESC'08, pp. 2743–2749.

Cao, D., S. Jiang, X. Yu, & F. Z. Peng (2011). Low-cost semi-z-source inverter for single-phase photovoltaic systems. IEEE Trans. Power Electron., 26 (12), 3514–3523.

Huang, Y., M. S. Shen, F. Z. Peng, & J. Wang (2006). Z-source inverter for residential photovoltaic systems. IEEE Trans. Power Electron., 21 (6),1776–1782.

Jonghe, C. D., B. F. Hobbs, & R. Belmans. (2012). Optimal generation mix with short-term demand response and Wind Penetration. IEEE Trans. Power systems., 27 (2), 830-839.

Jung, J., & Keyhani,A. (2007). Control of a fuel cell based Z-Source converter. IEEE Trans. Ind. Electron., 22 (2), 467–476.

Li, Y., S. Jiang, J. G. Cintron-Rivera, & F. Z. Peng (2013). Modeling and control of quasi-Z-Source inverter for distributed generation applications. IEEE Trans. Ind. Electron., 60 (4), 1532-1541.

Nguyen, M. K., Y. C. Lim, & Y. G. Kim. (2013). TZ-Source inverters. IEEE Trans. Ind. Electron., 60 (12), 5686–5695.

Peng, F. Z. (2003). Z-source inverter. IEEE Trans. Ind. Applicat. , 39, 504-510.

Peng, F. Z., M. S. Shen, & K. Holland. (2007). Application of Z-source inverter for traction drive of fuel cell-battery hybrid electric vehicles. IEEE Trans. Power Electron., 22 (3), 1054–1061.

Pouresmaeil, E., C. M. Espinar, M. M. Campos, D. M. Miracle, & O. G. Bellmunt (2013). A control technique for integration of DG units to the electrical grids. IEEE Trans. Ind. Electron., 6 (7), 2881–2893.

Qian, W., F. Z. Peng, & H. Cha (2011). Trans-Z-Source Inverters. IEEE Trans. Power Electron., 26 (12), 3453-3463.

Rocabert, J., A. Luna, F. Blaabjerg, and P. Rodr´ıguez (2012). Control of power converters in AC microgrids. IEEE Trans. Power Electron., 27 (11), 4734–4739.

Zhang,S., K. Tseng, D. M. Vilathgamuwa, T. D. Nguyen, & X. Wang (2011). Design of a robust grid interface system for PMSG-based wind turbine generators. IEEE Trans. Ind. Electron., 58 (1), 316–328.

Zhou, Z. J., X. Zhang, P. Xu, & W. X. Shen (2008). Single-phase uninterruptible power supply based on Z-source inverter. IEEE Trans. Ind. Electron., 55 (8), 2997–3003.

Zhu,M., K. Yu, & F. L. Luo (2010). Switched inductor Z-source inverter. IEEE Trans. Power Electron., 25 (8), 2150–2158.